UDUPI COCHIN SHIPYARD LIMITED

(Formerly Tebma Shipyards Limited)

ISO 9001:2015 BUREAU VERITAS Certification

UKAS QUALITY MANAGEMENT 0008

Date: 20.11.2026

TENDER ENQUIRY

Dear Sirs,

This tender enquiry is for Mooring Fittings for 177-182 which is required for 6300TDW dry cargo vessels being constructed at Udupi Cochin Shipyard Limited (UCSL), Malpe, (A Govt. of India Enterprises).

Sealed Tenders in duplicate, super scribing the Enquiry Number & Last date for receipt of Quotations on the envelope, are invited TWO BID SYSTEM two separate covers as 'Part- I Techno-commercial' and 'Part- II Price' – both enclosed in the single envelope, for the supply of following materials so as to reach the undersigned on or before the last date and time shown. Tenders should be addressed to Assistant General Manager (Materials), Udupi Cochin Shipyard Limited, Malpe Harbor Complex, Malpe. Udupi–576108, Karnataka, India.

Submission by Email: Offers (both Part- I Techno-commercial' and 'Part- II Price) in two separate password protected PDF file format, can also be made by E-mail (sony.clement@udupicsl.com/ purchase@udupicsl.com/ sunilsnair@udupicsl.com/ purchase2@udupicsl.com) on or before, the last date & time of receipt of tender as shown below, if delivery of sealed offers cannot be ensured at UCSL on the due date. The offer PDF files (Part- I Techno-commercial' and 'Part- II Price) to be named clearly (UCSL/MAT/PROJ/2026-27/2155– Techno-commercial and UCSL/MAT/PROJ/2026-27/2155 – Price bid).

Enquiry No.	Enquiry Date	Last Dt. & Time for Receipt of Tender	Tender Opening Date & Time
UCSL/MAT/PROJ/2026-27/2155	20.11.2026	02.12.2026, 15:30:00	02.12.2026, 15:30:00

उडुपी कोचीन शिपयार्ड लिमिटेड
पत्तन, पोत परिवहन और जलमार्ग मंत्रालय
भारत सरकार

UDUPI COCHIN SHIPYARD LIMITED
Ministry of Ports, Shipping & Waterways
Government of India

पंजीकृत कार्यालय:
एस. नं. 377, पषामत्तूर गाँव
पुकातुरई पोस्ट, मदुरान्तकं तालुका
कांचीपुरम – 603 116, तमिल नाडु, भारत।

कॉर्पोरेट कार्यालय:
माल्पे हार्बर कॉम्प्लेक्स, माल्पे
उडुपी – 576 108, कर्नाटक, भारत।

CIN: U27209TN1984GOI010994

Registered Office:
S.No.377, Pazhamathur Village
Pukathurai Post, Madurantakam Taluk
Kancheepuram - 603 116, Tamil Nadu, India

Corporate Office:
Malpe Harbour Complex, Malpe
Udupi - 576 108, Karnataka, India

GSTIN: 29AAACT1281B1ZO

Phone:
+91 820 2538600
Fax :
+91 820 2538605

www.tebma.co.in

Sl. No	Purchase Requisition	Material Code	Material Description	Quantity per Shipset	Total Quantity Required (6 Shipsets)	UoM	Required date at UCSL
1	1710003832/ 1710003833	1090152676	CHOCK TYPE B BULWARK MOUNTED 529 KN	6.000	36.00	EA	UY177 - UCSL, Malpe, Within 1 month from the date of PO.
2		1090152675	CHOCK TYPE A DECK MOUNTED ISO13729,529 KN	7.000	42.00	EA	
3		1090152678	DOUBLE BOLLARD 250A ISO13795:2020,113 KN	4.000	24.00	EA	UY178 - UCSL, Malpe, Within 2 month from the date of PO.
4		1090152677	DOUBLE BOLLARD 400A ISO13795:2020,529 KN	5.000	30.00	EA	
5		1090152679	DOUBLE BOLLARD+WARPING ROLLER 400A,529KN	4.000	24.00	EA	
6		1090152680	WARPING ROLLER WITH PEDESTAL DN300,529KN	3.000	18.00	EA	UY179 & 180 - UCSL, Malpe, Within 3 month from the date of PO. UY181 & 182 - UCSL, Malpe, Within 4 month from the date of PO.

In case of commercial queries please contact			
Name	**Designation**	**Mobile no.**	**E-mail**
Mr. Sony Clement	AGM (Materials)	9995804311	sony.clement@udupicsl.com
Mr. Sunil S Nair	Manager (Materials)	9884917724	sunilsnair@udupicsl.com
In case of technical queries please contact			
Name	**Designation**	**Mobile no.**	**E-mail**
Mr. Sarun S Kumar	Manager (Hull Design)	9952971296	sarun.kumar@udupicsl.com

Enclosures:

1. Purchase Technical Specifications – Annexure 1
2. General Terms and Conditions of procurement – Annexure 2
3. Price bid format - Annexure 3

4. Bank Guarantee/Security Deposit Format - Annexure 4

For Udupi Cochin Shipyard Ltd,

Authorized Signatory

सोणि क्लेमेन्ट टी एम
SONY CLEMENT T M
सहायक महाप्रबंधक/ASSISTANT GENERAL MANAGER
उडुपि कोचीन शिपयार्ड लिमिटेड
UDUPI COCHIN SHIPYARD LIMITED
माल्पे, कर्नाटक/MALPE, KARNATAKA-576 108

Rev.	Pages	Description	Date	Sign.
0	6	First Issue	17-08-2025	Sarun S Kumar
1	6	Quantity table updated	19-11-2026	Sarun S Kumar

6300 TDW DRY CARGO VESSEL

UDUPI COCHIN SHIPYARD LTD

(A Cochin Shipyard Company)

YARD NO	UY177 - UY182	**6300 TDW DRY CARGO VESSEL**
OWNER	WILSON ASA, NORWAY	
APPROVED	SACHITLAL PADMANABHAN	**PURCHASE TECHNICAL SPECIFICATION OF MOORING FITTINGS**
CHECKED	SARUN S KUMAR	
PREPARED	SARUN S KUMAR	
DATE	19-11-2026	Doc. No.: PTS-177-038 Rev. No: 01

ISSUED TO	DEP.																							
	NO.																							

This document/specification is the property of Udupi Cochin Shipyard Limited, and it must not be copied or the contents thereof or any information received in conjunction therewith must not be imparted /shared to any third party or utilized for any other purpose. The receipt of the document/specification implies that the conditions as mentioned herein are accepted.

TECHNICAL SPECIFICATION FOR MOORING FITTINGS

1. SCOPE OF SUPPLY

This specification relates to the supply of Mooring fittings for the **6300T DRY CARGO VESSEL** being built at Udupi Cochin Shipyard Ltd. The Mooring equipment and its fittings shall be confirmed to the ISO standard with certification if any are to be provided & quantity shall be as per the below table-1:

2. TABLE-1

Below mentioned quantity is for 01 no of vessel. Total requirement is for 06 nos of vessels (UY177 to 182).

Sl. No	Mooring fittings	Type	Standard	Design load (kN)	SWL (tonnes)	Qty. (Nos.) 1 Vessels	Remarks
1	Chock type A	Deck Mounted	ISO 13729	529	46	7 Nos.	Sample Attached
2	Chock type B	Bulwark Mounted	ISO 13729	529	46	6 Nos.	Sample Attached
3	Double bollard	400A	ISO 13795:2020	529	46	5 Nos.	Sample Attached
4	Double bollard	250A	ISO 13795:2020	113	10	4 Nos.	Sample Attached
5	Double bollard + Warping roller	400A	ISO 13795:2020	529	46	4 Nos.	Sample Attached
6	Warping roller with pedestal	DN300	ISO 13755 ISO 13776	529	46	3 Nos.	Sample Attached

NOTE:

i) The material of the mooring equipment shall be made as per ISO Standard.
ii) The mooring fittings shall be clearly marked with their SWL (refer Table – 1 above) by weld bead or equivalent. The SWL shall be expressed in tonnes (symbol 't') and be placed so that it is not obscured during operation of the fitting.
Example SWL XXX t
iii) Manufacturer shall bear the responsibility for the shop tests and delivery of the items to the yard.
iv) Each set of part shall be individually packed and protected against dampness and corrosion.

3. CONDITIONS OF SUPPLY

3.1 The mooring fittings must be manufactured from a recognized national or international standard Class approved mills. The Class certification detail of the foundry is to be clearly specified in the offer.
3.2 The mooring fittings shall be manufactured as per the standards mentioned in table 1 and are to be supplied with one coat of epoxy primer. The supply shall be as per the below depicted sample drawings and deviations if any shall be clearly indicated in the technical offer.
3.3 ISO Standards shall be followed and certification, if any, to be submitted, in line with DNV Class rules.
3.4 Auto-Cad format of the equipment drawings shall be submitted along with the technical offer.
3.5 Material Declaration by the manufacturer confirming the ISO standards as per table -1 must be supplied along with the items.

4. TESTING AND INSPECTION

Manufacturer's shop test, inspection such as NDT shall be carried out in accordance with the manufacturer's standard and certificates shall be submitted.

5. GUARANTEE

As per the commercial terms and conditions of this tender enquiry.

****

CHOCK TYPE-A

CHOCK - Deck Mounted
(ISO 13729)

Nominal Size 350x250x333
222 kg
SWL = 56 t

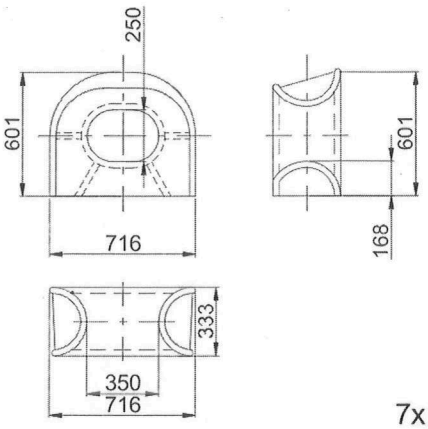

7x

CHOCK TYPE-B

CHOCK - Bulwark Mounted
(ISO 13729)

Nominal Size 350x250x333
141 kg
SWL = 56T

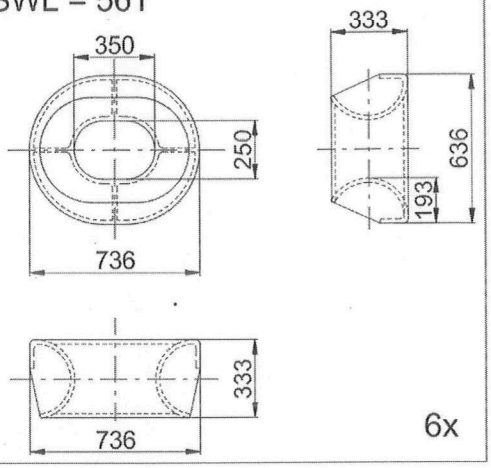

6x

DOUBLE BOLLARD

DOUBLE BOLLARD (ISO13795)

TYPE 400A
570 kg
SWL = 53T
Pipe 406,4x28

TYPE 250A
107 kg
SWL = 14T
Pipe 267,4x12

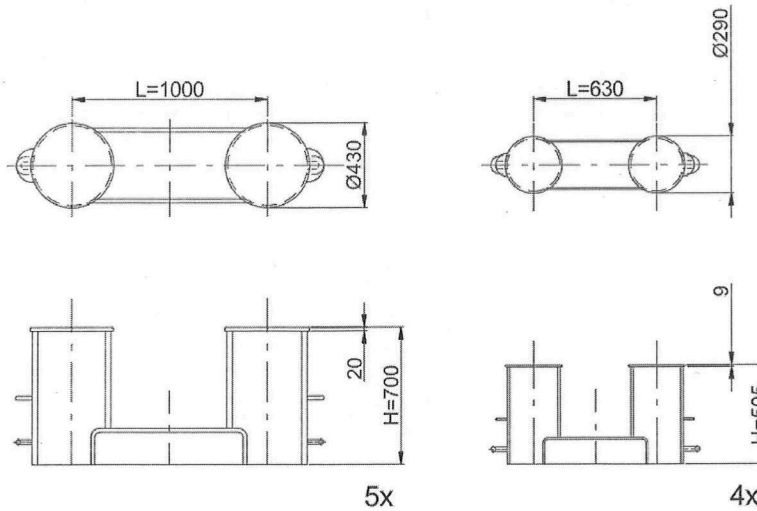

5x 4x

DOUBLE BOLLARD + WARPING ROLLER

DOUBLE BOLLARD WITH
WARPING ROLLER

TYPE 400A
570 kg
SWL = 53T
Pipe 406,4x28

TYPE A DN300
109 kg
SWL = 52T

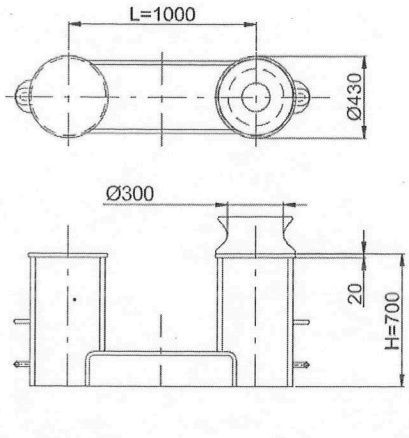

4x

WARPING ROLLER WITH PEDESTAL

WARPING ROLLER (ISO13755)
WITH PEDESTAL (ISO13776)

TYPE A DN300
109 kg
SWL = 52T

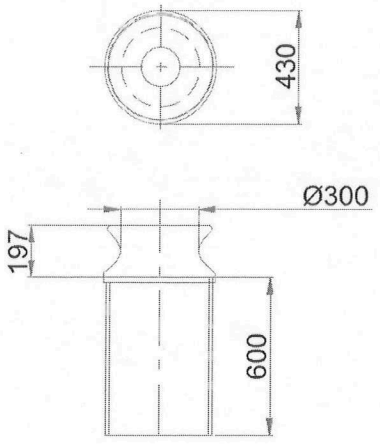

3x

General Terms and Condition

Annexure 2

SL NO	Description	Compliance by Supplier (YES/NO) In case of non-compliance, please provide remarks.
1	Tenderers are to carefully go through the terms and conditions and the technical specification of the items for which offers are called for. Tenderers have to adhere to above and supply full technical scope of items along with compliance of commercial conditions. UCSL have full right upon deviations, if any, including rejecting the partial scope/ complied offers.	
2	Offers are to be furnished in duplicate and should be free from overwriting. Corrections and additions, if any, must be attested. ~~In the case of E-tender offers shall be submitted only through UCSL E- procurement portal~~. Incomplete/ambiguous/conditional offers are likely to be rejected.	
3	Technical checklist, if applicable and current general terms & conditions of enquiry duly filled and signed and technical specifications of items offered (refer clause 5), should be submitted along with part-1 techno-commercial bid ~~in the case of two bid tenders and along with the bid documents in the case of single bid~~. Non receipt of the document may lead to rejection of offers. ~~In the case of E tender filling up of GTC check list in the portal itself is sufficient.~~	
4	Spare/Tool requirements to be confirmed, if applicable i) Spare parts shall be furnished in accordance with the Class recommendations and manufacturers standard. ii) The same shall be included in offered costs and shall be a part of L1 evaluation.	
5	Following Certificates/documents is to be submitted for the item in the event of an order: a. Material Test Certificate b. Refer PTS Clause No.3 Conditions of Supply (Page No. 2) b. Refer PTS Clause No.4 Conditions of Supply (Page No. 2)	
6	**SPECIFICATIONS**: - a) Manufacturer's name, their trade mark and brand, if any, should invariably be mentioned and illustrative leaflets giving technical particulars (technical details of items offered including technical literature) etc., should be attached to the offer. b) Materials offered shall conform to UCSL specifications and drawings. c) ~~Samples are to be supplied free of cost in the event of requirement by UCSL~~. The detailed working drawing, if called for, is also to be furnished for approval before commencement of manufacture.	
7	Packing materials should be eco-friendly.	
8	Supplier should follow the statutory requirements of product offered.	
9	Products supplied shall be non-toxic and harmless to health. In case of toxic materials, Materials Safety Data Sheet may be furnished along with the material.	
10	~~**COMMISSIONING & SEATRIALs: - Service engineer assistance for 15 days(excluding travel days, Sundays) irrespective of number of engineers in 3 trips per shipset.**~~ ~~**Total 90 man-days (excluding travel days, Sundays) irrespective of number of engineers in 18 trips for all 6 ships to be included in scope and cost.**~~ ~~b) Cost considered to include all charges incurred for travel, lodging, food and local transport costs.~~ ~~c) Additional man-day rates to be indicated separately (all inclusive of cost for boarding, lodging and local transport etc.) for extension beyond agreed man-days.~~ ~~Additional man-days/trips only applicable after completion of 28 man-days & 12 trips as indicated in 9a for all the vessels together.~~ ~~d) Whether the applicable taxes in India shall be borne by UCSL/Supplier (In the case of foreign vendors)~~ ~~e) Income tax liability of non-resident service engineer based on his period of stay in India shall not be borne by UCSL~~ ~~f). The non-resident seller/service provider shall provide such documents that are necessitated by the Indian income tax laws so as to enable UCSL to comply with the provisions of Indian statute and for payments of income tax in India. Following documents shall be sought by UCSL in this regard~~ ~~(i) Certificate under 10 (F)~~ ~~(ii) Tax residency certificate~~ ~~(iii) The certification regarding the existence/non-existence of business connection or permanent establishment in India.~~ ~~(The above is only an indicative list)~~	
11	Taxes and duties, if any, payable extra are to be indicated ~~in the price part for single bid and~~ in techno commercial part and price part (in the case of 2 bid tender).	
12	~~**MSEs, Startups and Make in India**~~ a) Local Suppliers (Make In India), MSME firms and Startups will be eligible for various Relaxations in pre-qualification criteria and other Benefits as per the orders promulgated by Government of India. Bidders are advised to refer the details of various Benefits and Relaxation in pre-qualification criteria as published at CSL website (www.cochinshipyard.in) under the Tenders tab for further reference.	
13	**Delivery Period:** a. Delivery time required for supplies should be indicated in the offer (including time frame for drawing preparation, class approvals, manufacture etc.) Please note, required date at UCSL are as follows: ~~b. The supplier shall submit all the drawings for approval from UCSL within 15 days from the date of PO and UCSL has forward the drawing approval within 15 days thereafter.~~ **Material required date at UCSL : UY177 - UCSL, Malpe, Within 1 month from the date of PO.** **UY178 - UCSL, Malpe, Within 2 month from the date of PO.** **UY179 & 180 - UCSL, Malpe, Within 3 month from the date of PO.** **UY181 & 182 - UCSL, Malpe, Within 4 month from the date of PO**	
14	**SHIPMENT** a. Supplier shall intimate UCSL the readiness of the Equipment/ Machinery/ Components and Parts prior to fourteen days of shipment. ~~b. A minimum 14 days free detention period is to be granted for clearance of the goods at Mangalore/Mumbai/Chennai seaport, as applicable for full containers.~~	
15	**PAYMENT TERMS:** a. For equipment's with commissioning ~~**UCSL payment term is 80% along with 100% applicable taxes within 30 days from the date of receipt and acceptance of items at UCSL stores after inspection and balance 20% on satisfactory completion of commissioning certified by UCSL.**~~	

SL NO	Description	Compliance by Supplier (YES/NO) In case of non-compliance, please provide remarks.
	b. For general items UCSL payment term is 100% within 30 days of receipt and acceptance of materials at UCSL stores after inspection.	
16	c) Payment mode shall be Electronic Clearing System (ECS)/cheque /NEFT/ /LC/CAD/TT-as mutually agreed in line with above standard payment terms. Variations from standard terms, if any, shall be appropriately loaded for tender comparison purposes for arriving the lowest bid. Bank charges (including LC charges, if any) inside India will be to UCSL account and outside India to supplier's account (In the case of import shipments). The charges for LC amendment, if any, shall be borne by the parties by whom the same is attributed/ necessitated.	
	d) Normally advance payments are not encouraged. In case, if advance payment is sought, the same can be considered for a maximum of 10% order value only. Interest at the base rate of SBI {applicable on the date of price bid opening} + 1% for the amount of advance will be charged. In addition, Bank guarantee for equivalent amount of advance to cover the period till advance payment is adjusted to be furnished. (i.e till completion of supplies or for a period as specifically agreed + 90 days). In case interest as above is not agreeable to be paid, the same will be loaded on your quoted basic prices, for tender comparison purposes for arriving the lowest bid	
	e) For deviation in Payments terms from UCSL standard terms, if any, aforesaid interest will be loaded on quoted item prices, for tender comparison purposes for arriving lowest bid.	
	f) Part payment shall be considered only if specifically agreed against partial supplies.	
17	**Security Deposit/ Warrantee Bank Guarantee**: a.i) The successful bidder shall remit a security deposit of 3% of the total order value (excluding taxes, duties) in the form of demand draft drawn in favor of Udupi Cochin Shipyard Ltd towards the satisfactory performance of the contract, if an order is placed on them. Alternatively, a Bank Guarantee equivalent to above % of the total order value (excluding taxes, duties) as per UCSL format from an International Bank as per approved list of banks available in CSL website (for overseas supplier) & Scheduled Indian bank for Indian supplier is to be submitted, if an order is placed towards satisfactory performance of the contract.	
	~~a.ii) The supplier shall also agree for 3% of total order value (excluding taxes and duties) as Bank guarantee towards the Guarantee clause~~	
	a.iii) The Bank Guarantee /DD as above should be initially valid till 90 days after completion of supplies in terms of SD and later revalidated (within the validity of initial BG) to cover the guarantee period mutually agreed plus 90 days~~. However, in the case of items where WBG is not applicable (as in 15.a.ii), the SD shall be valid for item delivery at yard plus 90 days~~. Fixed Deposit Receipt (for equivalent amount of Security Deposit/WBG required as per tender) in lieu of bank guarantee is also acceptable. Fixed Deposit Receipt shall be in the name of supplier with lien marked in favor of Udupi Cochin Shipyard Limited, Kochi.	
	~~a.iv) The above SD/WBG is required or applicable only when the total order value (excluding taxes and duties) is Rs.20lakhs and above (or equivalent foreign currency). In case supplier have quoted Rs.20 lakhs and above in tender and indicated that BG as not applicable in the check list, the clause 15b shall be considered for further process.~~	
	~~b) If the bidder is not agreeable to submission of SD/ warrantee bank guarantee as per UCSL general terms and conditions of enquiry, UCSL reserves the right to reject the offer at our discretion or 3% of total order value (excluding taxes and duties) will be added to the quoted price for tender comparison/ evaluation purpose on case to case basis for arriving the lowest bid.~~	
	~~However, in cases where total quoted value is less than 20 lakhs, (ie split order etc) and the order value of entire tendered items is more than Rs 20.0 lakhs, the aforesaid loading will be applied on individual items in following cases.~~	
	~~• The bidder has not quoted for entire tendered quantity~~ ~~• UCSL has technically / commercially rejected a few items in the tender~~	
	c) SD to be submitted within 2 weeks of receipt of order from yard.	
	d) Format of bank guarantee along with enquiry to be agreed, in general	
	e) Mode of receipt of bank guarantee is strictly through SWIFT mode from supplier bank to UCSL designated bank (for overseas bidders)	
18	**Risk Purchase:** If the supplier fails to supply the items ordered in good quality as per contract specification and fails to deliver within the delivery date or violate any of the terms and conditions of the purchase order, UCSL shall have the following rights.	
	a. To cancel the order partially or fully with 15 days, notice and to forfeit the security deposit, if any.	
	b. To impose tender holiday for the vendor for an appropriate period as decided by UCSL	
	c. To initiate alternate procurement action at the risk and cost of the supplier. This Risk Purchase clause is applicable only in the case of total order/ contract value (excluding taxes and duties) is Rs.20 lakhs and above (or equivalent foreign currency). Cases of value less than 20 lakhs will be addressed by serving appropriate caution/ warning notice to the firm.	
19	**Liquidated Damage:** In case of delay in supply of ordered materials beyond the stipulated delivery period, which is not attributable to UCSL, supplier is to pay Liquidated Damages (and not by way of penalty) a sum equivalent to ½% (half percent) per week or part of the week of the total basic price ~~in case of Machinery/Equipment and of basic price of materials delayed in all other cases~~, subject to a maximum of ~~10% of the total basic price of undelivered material/~~10% of total basic price of machinery/equipment (Total basic price is the order value excluding freight, taxes, other charges etc.). Further, GST will be applicable upon LD and the same also will be deducted along with LD. However,LD applicability is without prejudice to UCSL right to terminate contract for delayed delivery or other actions as per clause 16.	
20	**Guarantee** a) The Items supplied shall be guaranteed for rated performance and against damage or failure due to faulty design, defective materials and bad workmanship for a period of 18 months from the date of delivery of the ship to Owners OR 30 months from the date of delivery of items to Yard, whichever is earlier. Should such damage/failure occurred within the Guarantee period, the Supplier should immediately rectify the failure by repair/replacement of any such part found to be under performing/ defective, at his own expenses.	
	b) Further to equipment guarantee, replaced/repaired items shall be guaranteed for 12 months from date of repair/replacement.	
	Preservation & Packing	

SL NO	Description	Compliance by Supplier (YES/NO) In case of non-compliance, please provide remarks.
21	1.The preservation and packaging of the equipment to ensure that there is no damage and deterioration during transit and the period when the item is in storage in storhouse. 2. Duration of validity of preservation to be indicated. 3. Methodology for receipt inspection without affecting preservation (for main equipment and loose supplied items) is to be indicated by the OEM including any requirement for re-preservation 4. The procedure for re-preservation to be supplied by the firm. 5. Requirement of special provisions for storage and transportation to be specifically indicated. 6. Any consumables required for preservation/ re-preservation beyond a stipulated time period to be clearly indicated by OEM.	
22	**Jurisdiction:** All questions, disputes or difference arising under, out of, or in connection with contracts shall be subject to the exclusive jurisdiction of the Courts at Udupi, India. Alternate dispute resolution mechanism can also be considered.	
23	**Force Majeure condition:** Should failure in performance of the contract or part thereof arise from war insurrection, restrain imposed by Government, Act of Legislature or other Statutory Authority or illegal strike, riot, legal lock-out, flood, fire, explosion, act of God or any inevitable or unforeseen event beyond human control which may be construed as reasonable ground for an extension of time, UCSL may allow such additional time as is mutually agreed, to be justified by the circumstances of the case. The occurrence/cessation of force majeure situation is to be informed with documentary evidence within 15 days from the date of occurrence/ cessation.	
24	**Indian Agent:** a) Udupi Cochin Shipyard Ltd prefers to deal directly with the supplier. However, if the supplier appoints an Indian Agent to deal with Udupi Cochin Shipyard Ltd., the Agency commission payable by the supplier to such an agency shall be intimated.	
	b) If manufacturers affect the supply through Agents only, authorization in writing from manufacturers in favor of the Agent for supply to UCSL shall be furnished.	
	c) In case where an Agent participates a tender on behalf of a Foreign manufacturer Indian agent should submit specific authorization from the authorized person of foreign manufacturer.	
	d) In a tender, either the Indian agent on behalf of the Principal/ OEM or Principal/OEM itself can bid but both cannot bid simultaneously for the same item/ product in the same tender. If an agent submits bid on behalf of principal/OEM, the same agent shall not submit a bid on behalf of another principal/OEM in the same tender for the same item/product. Indian agents cannot represent more than one firm or quote on their behalf for any particular tender.	
	e) Clarifications, either technical or commercial, should be submitted to points specially asked for only. The opportunity so given should not be used for correcting/changing/amending the data/conditions already submitted with the tender	
25	**PRICING:** a. Overseas firms should quote prices both on FOB and C&F Chennai Seaport terms. Indigenous bidders should quote prices for delivery of materials at UCSL stores. Insurance shall be to UCSL scope. ~~In the case of E tender C&F price shall be quoted and the freight charges shall be indicated separately under header conditions as per the provision in the CSL e-tender portal~~.	
	b. Exchange rate variation will not be applicable and the prices shall be fixed for an order within validity period in the case of indigenous/ import orders.	
	c. Offer to be submitted in EUR/USD/INR currency Generally. Indian Firms shall quote in INR only.	
	d. Comparison of prices will be in INR only. All foreign currencies will be converted to INR for comparison and Exchange rate as on date of price bid opening shall be considered for arriving lowest bid	
	e. Prices should be valid for acceptance for a period of 4 months from the date of tender opening.	
	f. No enhancement of rate for whatsoever cause will be allowed once the offer is accepted and an order is placed. Withdrawal of the quotation after it is accepted or failure to make the supply within the stipulated delivery period, will entail cancellation of the order and forfeiture of Earnest Money Deposit/Security deposit, if any and/or risk purchase, without prejudice to other penal actions, including tender holiday after serving show cause notices, as deemed fit.	
	g. Conditional discounts, if any, will not be reckoned for tender evaluation/ comparison purpose. However, if the bidder becomes L1 at original offer, conditional discount shall also be considered.	
	h. Unpriced bid (price bid without price) duly signed is to be submitted along with techno-commercial offer in the price format, provided. Price should be quoted separately for each item shown in the format. In the event price bid is different from the unpriced format already submitted, yard reserves the right to reject the offer at our discretion without any further discussions. Details of optional items, if any, should be indicated under separate heading in the Techno commercial bid and the respective price details should also be given in the price bid. Combining of figures against more than one item and ambiguous clauses will lead to rejection of the bid.	
	i. If, in the price structure quoted for the required material/ item, there is discrepancy between the unit price and the total price (which is obtained by multiplying the unit price by the quantity), the unit price shall prevail and the total price corrected accordingly. If there is an error in a total corresponding to the addition or subtraction of subtotals, the subtotals shall prevail and the total shall be corrected. If there is a discrepancy between words and figures, amount in words of respective figures shall prevail. If the bidder does not agree to the observation of the UCSL, the tender is liable to be rejected and the same shall be intimated.	
	j. After submission of quotation/price offer no unsolicited correspondence will be entertained.	
	k. Udupi Cochin Shipyard Limited does not bind itself to accept the lowest or any tender but reserves to itself the right to reject any or all or a part of any tender at its discretion.	
	l. UCSL reserves the right to place order to the techno-commercially qualified lowest bidder in full or individual items to the respective lowest bidders in the tender (except in cases where basis of L1 arrival is declared specifically in enquiry). Also please refer loading applicable for split order of value less than 20 lakhs (Clause 15 b)	
	m. In the case of part quantity order, the quoted freight charges applicable for the entire quantity as per enquiry shall be apportioned and allocated.	
	L1 computation shall be based on total cost of all items, including cost of spares as per tender & Class/certification charges, if any required (excluding GST/IGST). For all import consignments directly imported in UCSL's name/or on High Seas Sale agreement, customs duty is not applicable at import clearance. Customs clearance at Chennai port and transport till UCSL stores shall be to UCSL account.	

SL NO	Description	Compliance by Supplier (YES/NO) In case of non-compliance, please provide remarks.
26	**Integrity Pact:** As per Government of India (Central Vigilance Department), UCSL and the SUPPLIER have to sign an Integrity Pact for the high value contracts, for ensuring transparency, equity and competitiveness in public procurement. The Tenderer has to sign Pre-Contract Integrity Pact as per format enclosed and to submit along with your offer. The above is applicable when the total basic price is above Rs. 100.0 lakhs. (present limit)	
27	**Grievance Redressal Committee:** As an alternate dispute redressal or reconciliation mechanism (other than arbitration clause), Cochin Shipyard has constituted Grievance Redressal Committee. Currently following executives of the committee may be contacted for the settlement of disputes, if any, arising out of all contracts. a) Mrs. Anjana KR, GM (Design) b) Mr.Subramanian K K, Deputy General Manager (HR) c) Mr. Shibu John, Deputy General Manager (Finance)	
28	**SUB CONTRACTING AND ASSIGNMENT** Supplier shall not contract with any subcontractor and/or vendor without the prior written consent of UCSL. Such consent shall not relieve the Supplier from any of his responsibilities and liabilities under the Purchase Order. In addition, Supplier shall ensure that the terms and conditions of any such contract shall comply with and correspond to the terms and conditions of the Purchase Order.	
29	**General:** a. Prior to price bid opening, UCSL is at liberty to take the credit rating of bidders at our cost on case to case basis, and to include the same during the evaluation of the tender.	
	b. Deviations, if any in the techno-commercial offer from that of the tender enquiry in any form should be clearly furnished in a separate document titled as "List of Deviations", failing which it will be presumed that all the terms and conditions are acceptable.	
	c. The techno-commercial part alone will be opened initially on the due date of tender. The price part will be opened only after evaluation of the Techno commercial part. Date of opening of the price part will be intimated to those firms whose Techno-commercial bids would be acceptable after the evaluation. Suppliers are allowed to depute their authorized representative to be present at the time of opening of Price Bid of their tender only. ~~In case of E-Tender , suppliers shall not depute their representative to CSL. However techno-commercially qualified supplier can view the price details in CSL E-procurement portal after opening the price bid~~	
30	**P.O**:- a. In the event supplier's offer leads to an agreement to effect supplies, a formal purchase order shall be issued by UCSL on the basis of agreed terms and conditions of tender.	
	b. Upon placement of order (by post or mail) the supplier shall submit the acknowledgement (ie: signed and stamped original/ scanned soft copy by mail) as a token of acceptance of order within 5 days. In case UCSL doesn't receive the above, it will be deemed as accepted.	
	c. Supplier shall submit monthly progress report on the ordering status of raw materials, construction progress of the items ordered by UCSL, supporting with photo evidence.	
31	**SUPPLY**: - a) UCSL reserve the right to inspect the goods after receipt at UCSL store / prior to dispatch (by UCSL or UCSL authorized agency at yard cost). Short supply / Mismatch / Replacement of Defective items / those not meeting agreed / contractual specification/ Items failing during commissioning shall be sent on air freight/ DDP basis courier freight prepaid/delivered at UCSL store. The customs clearance charges of above shall be to supplier account.	
	b) Replacements during guarantee period to be sent on Duty and all taxes paid basis to location as required by yard/vessel owner with all expenses to supplier account.	
	c) Defective items, if any, after receipt shall be sent back on cost, carriage, handling and insurance prepaid basis including re-export (wherever desired by supplier) to be arranged by supplier. Defective items shall be returned after receipt of replacement item. Supplier shall replace all/ part of items as applicable, in case of rejection, within 4 weeks of reporting the defect, without any additional cost to UCSL. In case the defective materials are not taken back within the said period, UCSL reserves the right to dispose the same without further intimation.	
	d) The supplier shall compensate UCSL for loss on account of shortage in quantity and number of pieces received than that indicated in the bill of lading provided the UCSL's claim is rejected by the insurance due to any fault of supplier. Such claims, if any, shall be supported by recognized surveyors report. The supplier shall also compensate for losses, if any sustained by the UCSL due to defective packing and/or marking of the goods not in accordance with the terms of contract. The time limits for filing claims under clauses above shall be generally 180 days from the date of complete discharge of goods.	
32	UCSL reserves the right to alter, modify the scope of supply at its discretion and in consistent with the policy of the Government of India and statutory bodies under them as applicable to the contract from time to time.	
33	UCSL shall, at its own discretion and costs opt for obtaining credit information report on supplier's financial credentials through credit rating firms. The same shall also be considered as criteria for commercial evaluation. In the event supplier's credit rating is not at least satisfactory, offer will be summarily rejected.	
34	Public procurement policy as per order No. D.O. No. P-45021/2/2017-PP (BE-II) (E-1588) by Department for promotion of Industry and Internal Trade Ministry of Commerce & Industry is applicable for this tender	
35	UCSL reserves the right to commercially reject the offer if compliance is not issued to terms at Sl. No.14, 15, 16, 17 & 18 without any further clarification / notice / communication in this regard from M/s. Udupi Cochin Shipyard Ltd., even though the offer is technically acceptable.	
36	UCSL has an option of receiving 4 + 4 more similar projects within June 2024 and upon exercise of this option by owner yard will confirm the same quantity of item to supplier within June 2024 or earlier. Therefore the price offer shall consist the prices for current projects as well as the discounted prices applicable for these optional projects with validity to confirm the order till June 2024. However the L1 determination shall be purely based on current confirmed quantity.	
~~37~~	Restriction of bidders sharing land border with India vide Office memorandum dt 23.7.2020 Order - Public Procurement no 1 dt 23.7.2020, Order no 2 dt 23.7.2020 and Order no 3 dt 24.7.2020	
A	Requirement of registration	

SL NO	Description	Compliance by Supplier (YES/NO) In case of non-compliance, please provide remarks.
1	Any bidder from a country which shares a land border with India will be eligible to bid in this tender only if the bidder is registered with competent authority as per C below. In works contracts, including turkey contracts, contractors shall not be allowed to sub contract works to any contractor from a country which shares a land border with India unless such contractor is registered with Competent authority. Relevant certificate to be submitted by bidder from a country which shares land border with India except for bidders to which Govt of India has extended lines of Credit or in which Govt of India has development projects, along with the offer as proof of registration with competent authority, failing which the offer will not be considered. A certificate is to be submitted by the bidder for compliance with the order referred above along with tender documents for consideration of offer (Wordings are as per Clause below). If such certificate given by a bidder whose bid is accepted is found to be false, this would be a ground for immediate termination and further legal action in accordance with law.	
2	Wordings of certificate to be submitted along with tender documents for Works involving possibility of sub contracting	
3	I have read the clause regarding restrictions on procurement from a bidder of a country which shares a land border with India and on sub contracting to contractors from such countries. I certify that this bidder is not from such a country or if from such a country has been registered with the competent authority and will not subcontract any work to a contractor from such countries unless such contractor is registered with the competent authority. I hereby certify that this bidder fulfils all requirements in this regard and is eligible to be considered(Evidence of valid registration by the competent authority shall be attached wherever applicable)	
B	Validity of registration	
1	Registration should be valid at the time of submission of bids and at the time of acceptance of bids. In respect of supply otherwise than by tender, registration should be valid at the time of placement of order. If the bidder is validly registered at the time of acceptance /order placement, registration shall not be a relevant consideration during contract execution.	
C	Competent authority and Procedure for registration	
1	The competent authority for the purpose of registration under the order shall be Registration committee constituted by the Department of Promotion of Industry and Internal Trade (DPIIT). Details of the committee and procedure for registration and restrictions shall be as per Ann I of the Order - Public Procurement no 1 dt 23.7.2020 issued by Ministry of Finance, department of Expenditure.	
D	Definition of Bidder and Bidder from a country sharing land border with India	
1	Bidder is defined as any person or firm or company including any, member of a consortium or joint venture, every artificial, juridical person not falling in any of the descriptions of bidders stated hereinbefore, including any agency, branch or office controlled by such person, participating in a procurement process.	
2	"Bidder from a country which shares a land border with India" for the purpose of this Order means:-	
	a) An entity incorporated, established or registered in such a country; or	
	b) A subsidiary of an entity incorporated, established or registered in such a country; or	
	c) An entity substantially controlled through entities incorporated, established or registered in such a country; or	
	d) An entity whose beneficial owner is situated in such a country; or	
	e) An Indian (or other) agent of such an entity; or	
	f) A natural person who is a citizen of such a country; or	
	g) A constitution or joint venture where any member of the consortium or joint venture falls under any of the above.	
3	Type of business entity	
	(Private Limited Company/ Public Limited Company/ Sole Proprietorship/ One Person Company/ Partnership/ Limited Liability Partnership/ Joint Venture/ Trust/ NGO)	
	In case of incorporated entity - to attach certificate of incorporation	
4	Beneficial Owners - as defined in the Department of Expenditure Order (Public Procurement No.1) issued vide No. F.No.6/18/2019-PPD dated 23rd July, 2020.	
	Details of all beneficial owners having entitlement of more than 01% of shares or capital or profit to be given, in the format as given in Annexure-I duly certified by practicing Chartered Account in India.	
38	**Preference to Make in India**	
	Purchase preference in accordance with Public procurement (Preference to Make in India Order - 2017) Order from Department of Promotion of Industry and Internal Trade P - 45021 /2/2017/- B.E -II dt ,4.6.2020 and as amended from time to time shall be applicable as per below	
	In the procurement of all goods/services/works in respect of which there is sufficient local capacity/local competition, only Class I Local suppliers shall be eligible to bid irrespective of purchase value	
	In the procurement of all goods/services /works which are not covered as above and with estimated value of purchase less than Rs 200.0 Crores, only Class I local suppliers along with Class II local suppliers shall be eligible to bid.	
39	**Purchase preferences for Class I local suppliers**	
A	In the procurement of goods/works covered under 2 above and which are divisible in nature, Class I local supplier shall be eligible for Purchase preference over Class II/Non local supplier as per following	
B	If L1 bid is not a Class I local supplier, 50% of the order quantity shall be awarded to L1. Thereafter the lowest bidder among Class I local supplier will be invited to match the L1 price for the remaining 50% quantity subject to Class I local supplier quoted price falling within 20% margin. Contract for that quantity shall be awarded to such Class I local supplier subject to matching L1 price. In case such lowest eligible Class I local supplier fails to match L1 price or accept less than offered quantity, next higher Class I local supplier within 20% margin shall be invited to match the L1 price for the remaining qty and so on. If some quantity is left uncovered on Class I local supplier, such balance quantity shall be ordered on L1 bidder.	
C	For procurements that are not divisible in nature and in procurement of services evaluated on price alone, Class I local supplier shall get purchase preference over Class II/Non local supplier as per below	
D	If L1 is not a Class I local supplier, lowest bidder among Class I local supplier will be invited to match L1 price subject to Class I local supplier quoted price falling within 20% of L1 price and contract will be awarded to such Class I local supplier, subject to matching L1 price. In case such lowest eligible Class I local supplier fails to match L1 price, procedure same as para 3 above will be opted. In case none of Class I local suppliers within 20% margin matches L1 price, contract shall be awarded to L1 bidder. The purchase preference as above will be only for Class I local supplier and Class II local supplier will not be eligible for any Purchase preference	

SL NO	Description	Compliance by Supplier (YES/NO) In case of non-compliance, please provide remarks.
E	Local content requirement to categorize a supplier as Class I/Class II/Non local supplier shall be as per below. Definition of local content shall be as per order dt 4.6.2020 ie amount of value added in India which shall be the total value of the item procured (excluding net domestic indirect taxes) minus the value of import content in the item (including all customs duties) as a proportion of total value in percentage.	
F	Class I -Local content equal to or greater than 50%	
G	Class II-Local content greater than 20%, less than 50%	
H	Non local -Local content less than 20%	
40	**Declaration of local content**	
A	Class I local supplier /Class II local supplier at the time of tender shall indicate % of local content and provide self-certification that offered item shall meet the local content requirement for Class I/Class II as applicable including details of locations at which local value addition is made.	
B	In case of procurement for a value in excess of Rs 10.0 Crores Class I/Class II local supplier is to provide a certificate from statutory auditor/cost auditor (for companies) /practicing cost accountant/Chartered accountant (suppliers other than companies) indicating % of local content	
C	Verification of the Certificates issued by the bidder shall be carried out by CSL on random basis. False declarations will attract actions as stipulated in the order referred, including other actions as permissible by law.	
D	Exemption is applicable from provisions of order for purchases with estimated values less than Rs 5.0 lakhs	
E	Notwithstanding above, exemptions for meeting local content as per relevant Clause of order dt 4.6.2020 and as amended from time to time shall apply.	

Note: Statement striked out is not applicable.

PRICE BID FORMAT

Tender Enquiry No: UCSL/MAT/PROJ/2026-27/2155 | **Annexure 03**

Vessel/Project: UY177-182

Supplier Name:

Sl No	Purchase Requisition	Material Code	Material Description	Quantity per Shipset	Total Quantity Required (6 Shipsets)	UoM	Unit Rate in INR	Total Rate
1	1710003832/ 1710003833	1090152676	CHOCK TYPE B BULWARK MOUNTED 529 KN	6.00	36.00	EA		
2		1090152675	CHOCK TYPE A DECK MOUNTED ISO13729,529 KN	7.00	42.00	EA		
3		1090152678	DOUBLE BOLLARD 250A ISO13795:2020,113 KN	4.00	24.00	EA		
4		1090152677	DOUBLE BOLLARD 400A ISO13795:2020,529 KN	5.00	30.00	EA		
5		1090152679	DOUBLE BOLLARD+WARPING ROLLER 400A,529KN	4.00	24.00	EA		
6		1090152680	WARPING ROLLER WITH PEDESTAL DN300,529KN	3.00	18.00	EA		
	TOTAL BASIC PRICE							
7	Packing & Forwarding Charges / FOB Charges				To be Included			
8	Freight Charges				To be Included			
9	Class Inspection Charges				To be Included			
10	Other Charges, if any (specify)				To be Included			
11	Transit Insurance and Unloading Charges				By UCSL			
12	GST (as applicable)							
13	HSN CODE							
14	Currency							
15	Total Order value FOR UCSL STORES PRICE							
16	Delivery Period required at UCSL Stores				**UY177 - UCSL, Malpe, Within 1 month from the date of PO.** **UY178 - UCSL, Malpe, Within 2 month from the date of PO.** **UY179 & 180 - UCSL, Malpe, Within 3 month from the date of PO.** **UY181 & 182 - UCSL, Malpe, Within 4 month from the date of PO.**			

Important Note:

1. **Price bids received other than the Price Bid Format in Annexure 3, will be rejected.**
2. **Un-priced Bid, to be submitted along with techno commercial bid with details like percentage of taxes & duties applicable and showing whether "Amount quoted/ Nil/ Included/ By UCSL" against respective column. Confirmation regarding exercising the option shall be provided during finalization of the purchase order.**

BANK GUARANTEE IN LIEU OF SECURITY DEPOSIT

To

UDUPI COCHIN SHIPYARD LTD
(Formerly Tebma Shipyards Limited)
MALPE HARBOUR COMPLEX, MALPE UDUPI- 576108.

WHEREAS..... (Name & Address of Supplier) (Hereinafter called **"the Supplier")** has undertaken, in pursuance of Contract..... No..... Dated: ..... to execute..... (Name of Contract and brief description of works) (hereinafter called " **the Contract"** AND WHEREAS it has been stipulated by UDUPI COCHIN SHIPYARD LTD (The Buyer- hereinafter called **"UCSL")** in the said contract that the supplier shall furnish UCSL with a Bank Guarantee for the sum specified therein as security for compliance with the Supplier's obligations in accordance with the Contract.

AND WHEREAS we have agreed to give the Supplier such a Bank Guarantee.

NOW THEREFORE we .....(Name of the Bank) having its Head Office at..... .....(Address of Head Office) and acting through its branch office at.....(Address of the executing branch) (hereinafter called "the Bank") hereby affirm that we are the Guarantor and responsible to **UCSL,** on behalf of the Supplier up to a total of .....(amount* of Guarantee).....in words).

We, the bank, hereby irrevocably undertake to pay you any amount not exceeding in total the Guarantee Amount upon receipt by us of your demand in writing accompanied by the following documents:

1. Your signed statement certifying that the Supplier is in breach of his obligation(s) under the Contract and the respect in which the Supplier is in breach.
2. Your signed statement certifying that the Supplier has been given a prior written notice by email from you to make good the aforesaid breach and that the Supplier still failed to fulfill the Contract within 30 days of such notice. A copy of such notice given by email to the Supplier shall be attached to the demand for payment.

Any demand for payment should contain your authorized signatures which must be authorized by your bankers or by a notary public.

We, the Bank, further agree that no change or addition to or other modification of the terms of the Contract or of the Works to be performed there under or of any of the Contract documents which may be made between **UCSL** and the Supplier shall in any way release us from any liability under this guarantee, and we hereby waive notice of any such change, addition or modification-:- We, the Bank, further agree that any change in the constitution of the said contractor or the said bank shall not discharge our liability hereunder.

Notwithstanding anything contained herein:

1. Our liability under this Bank Guarantee shall not exceed.....
   (.....Only).
2. This Bank Guarantee shall be valid up to {date) and
3. We are liable to pay the guaranteed amount or any part thereof under this bank guarantee only and only if **UCSL** serve upon us a written claim or demand on or before .....(validity date).

Any demand for payment under this guarantee must be received by us at this office during working hours on or before the validity date.Should we receive no claim from you by the validity date, our liability to you will cease and the guarantee will definitely become null and void whether returned to us or not.

Yours truly,

Signature and seal of the:

Guarantor: .....

Name of bank: .....

Address: .....Date: .....

*An amount shall be inserted by the Guarantor, representing the percentage of the Contract Price specified in the Contract and denominated in respective Dollars I Indian Rupees/Other Currency.