TENDER NOTICE

सीएसएल – कोलकाता पोत मरम्मत यूनिट (सीकेएसआरयू), कोलकाता की ओर से निम्न सूचित कार्य केलिए अनुभवी फर्मों से मुहरबंद प्रतिस्पर्धी निविदाएं आमंत्रित की जाती हैं, ताकि निम्न सूचित तिथि और समय पर या उससे पहले अधोहस्ताक्षरी तक पहुँच सकें। कृपया संलग्न तकनीकी विनिर्देश, सामान्य नियम और शर्तें एवं अन्य अनुदेशों का संदर्भ लें।

Sealed competitive tenders or password protected email tenders are invited on behalf of CSL-Kolkata Ship Repair Unit (CKSRU), Kolkata from experienced firms for the under mentioned work, so as to reach the undersigned on or before the date and time mentioned below. Please refer to the Technical Specification, General Terms and Conditions and other instructions attached.

निविदा सं. व तिथि Tender No. & date	सीएसएल/सीकेएसआरयू/टीईएन/722/2026-27 दिनांक 18.11.2026 CSL/CKSRU/TEN/722/2026-27 dated 18.11.2026
कार्य का नाम Name of Work	"CKSRU, कोलकाता में मचान (scaffolding) भंडारण शेड का निर्माण" (विस्तृत विनिर्देश अलग से संलग्न है)। "Construction of scaffolding storage shed at CKSRU, Kolkata" (Detailed specification is enclosed separately)
निविदा का प्रकार Type of Tender	दो बोली Two Bid
जमा करने केलिए बयाना राशि Earnest Money to be deposit	रु. 10,000/- Rs. 10,000/-
निविदा प्रपत्र की लागत Cost of Tender Form	शून्य Nil
निविदा प्राप्ति की □ंतिम तिथि एवं समय Last date & time of receipt of tender	दिनांक 03.12.2026 को 16:00 बजे तक 03.12.2026 up to 16:00 hrs
निविदा खोलने की तिथि एवं समय Date & time of opening of tender	दिनांक 03.12.2026 को 16:30 बजे तक 03.12.2026 at 16:30 hrs

लिफाफे के ऊपर निविदा संदर्भ स्पष्ट रूप से सूचित किया जाना चाहिए।

Tender reference should be clearly indicated on top of the envelope.

सहायक महाप्रबंधक प्रभारी (सीकेएसआरयू) को संबोधित मुहरबंद निविदाएं सीएसएल- कोलकाता ोत मरम्मत यूनिट (सीकेएसआरयू), ड्राई ॉक ऑफिस बिल्ि ंग, गेट नं. 9, नेताजी सुभास ॉक, सर्कुलर गार्ि न रीच रो, कोलकाता – 700024 में स्थित 'सीकेएसआरयू निविदा बॉक्स' में नियत तारीख एवं समय तक डाली जाएंगी। पासवर्ड से सुरक्षित निविदाएं निर्धारित प्रारूप में ईमेल के माध्यम से poulam.chakraborty@cochinshipyard.in पर नियत तारीख और समय तक भेज दी जाएंगी।

Sealed tenders addressed to The Assistant General Manager i/c (CKSRU) shall be **dropped in the "CKSRU Tender box" located at CSL-Kolkata Ship Repair Unit (CKSRU), Dry Dock Office Building, Gate No. 9, Netaji Subhas Dock, Circular Garden Reach Road, Kolkata -700024 by the due date and time.** Password protected tenders shall be send via email in prescribed format to poulam.chakraborty@cochinshipyard.in by the due date and time.

उपरोक्त कार्य केलिए प्रभारी ि धकारी
Officer In-Charge for the above work

नाम/ Name: पौलम चक्रवर्ती/ Poulam Chakraborty
पदनाम/ Designation: एसपीओ (सिविल)/SPO (Civil)
संपर्क सं. (मोब.)/Contact No (M): +91- 9038104297
ई-मेल/ E-mail: poulam.chakraborty@cochinshipyard.in

कृते कोचीन शिपयार्ड लिमिटेड
For Cochin Shipyard Limited

ठेकेदार का हस्ताक्षर एवं मुहर
Signature and Seal of the Contractor (s)

सहायक महाप्रबंधक प्रभारी (सीकेएसआरयू)
Assistant General Manager i/c (CKSRU)

TABLE OF CONTENTS

Sl. No.	Description	Annexure
1	Scope of work & Eligibility criteria	1
2	Price bid format	2
3	General Terms & Conditions	3
4	Special instructions for two bid systems	4
5	Vendor Details	5

Annexure - 1

Scope of Work and Technical Specification

1. Scope of Work

The work shall include site preparation, civil foundations and flooring, supply/fabrication/erection of the structural steel shed, protective painting, roofing, fencing and installation of gates, complete in all respects as per approved drawings and technical specifications.

Scope of work for Construction of scaffolding storage shed at CKSRU, Kolkata:

- Site preparation, earthwork, filling, compaction and levelling of the proposed shed area.
- Construction of RCC foundations for shed columns, including excavation, reinforcement, shuttering, concreting and curing.
- Supply, fabrication and erection of MS structural steel shed as per approved drawings.
- Sand blasting and application of epoxy primer and two coats of epoxy HB paint to structural steel members.
- Supply and fixing of 0.50 mm thick colour-coated roofing sheets, including necessary cutting, fixing and finishing.
- Supply and installation of 20 mm dia × 600 mm long Grade 8.8 foundation bolts.
- Providing brick flat soling and PCC flooring as specified.
- Supply, fabrication and fixing of GI wire-mesh/chain-link fencing with associated civil works.
- Supply, fabrication and installation of 3 material entry/exit gates as per drawing.
- Provision of necessary openings/access arrangements in the fencing for material movement and handling.
- Complete the work in all respects as per approved drawings, technical specifications and site requirements.

2. This specification outlines the technical requirements for construction of the new scaffolding storage space at CKSRU, Kolkata.

a) Excavation:

Excavation in all kinds of soil for RCC foundations, fencing posts, and other associated civil works as per approved drawings, including setting out, dressing of sides and bottom, removal of excavated material, stacking of usable earth at designated locations, and disposal of surplus earth as directed by the Engineer-in-Charge, complete in all respects.

b) Backfilling:

Backfilling around completed foundations and other excavated areas with approved available excavated earth, in layers of suitable thickness, including spreading, watering, levelling, and proper compaction to achieve the required density and finished levels, complete in all respects.

c) Brick Flat Soling:

Providing and laying single-layer brick flat soling using approved first-class bricks over the properly prepared and compacted subgrade, including arranging bricks in the required pattern, filling joints and gaps with sand, levelling, alignment, compaction, and all necessary incidental works, complete in all respects.

d) Plain Cement Concrete (PCC) Work:

Providing and laying plain cement concrete of the specified grade and thickness for foundation levelling courses, flooring, and other locations as indicated in the approved drawings, including preparation of the base, mixing, transportation, placing, compaction, levelling, finishing, curing, and all necessary materials, labour, and equipment, complete in all respects.

e) Reinforced Cement Concrete (RCC) Foundation:

Providing and constructing RCC foundations for structural steel shed columns as per approved drawings, including formwork, reinforcement steel, binding wire, cover blocks, placing and compacting concrete of the specified grade, curing, finishing, and all associated works required for completion, complete in all respects.

f) Foundation Bolts:

Supplying and installing 20 mm diameter × 600 mm long Grade 8.8 foundation bolts for fixing structural steel columns, including nuts, washers, positioning templates, accurate alignment, maintaining the required projection and spacing, protection of

threads, and all necessary accessories, complete as per approved drawings and specifications.

g) Structural Steel Fabrication and Erection:

Providing, fabricating, and erecting the complete MS structural steel framework for the scaffolding storage shed as per approved drawings, including cutting, drilling, welding, bolted connections, base plates, gusset plates, stiffeners, bracing, purlins, rafters, columns, transportation, lifting, alignment, plumbing, and all necessary fittings and accessories, complete in all respects.

h) Surface Preparation and Protective Painting:

Providing sandblasting of all structural steel members to the specified surface preparation grade, followed by application of one coat of approved epoxy primer and two coats of epoxy high-build (HB) paint, including surface cleaning, application, curing, touch-up painting, and ensuring the specified dry film thickness (DFT), complete as per approved specifications.

i) Colour-Coated Roofing Sheets:

Supplying and fixing 0.50 mm thick colour-coated roofing sheets over the structural steel framework, including cutting, overlapping, alignment, fixing with suitable fasteners and sealing washers, ridge caps, flashing, edge trims, and other necessary accessories to ensure proper fixing and weatherproofing, complete as per approved drawings.

j) GI Wire-Mesh/Chain-Link Fencing:

Supplying and installing GI wire-mesh/chain-link fencing of the specified height and mesh size, including fencing posts, supporting members, clamps, fasteners, tensioning arrangements, foundations, excavation, concreting, alignment, fixing, and all associated civil and fabrication works, complete as per approved drawings.

k) Material Entry/Exit Gates:

Supplying, fabricating, and installing three (3) material entry/exit gates as per approved drawings, including MS gate frames, specified mesh infill, hinges, locking and latching arrangements, handles, gate posts, foundations, protective painting, alignment, and all necessary hardware and accessories, ensuring smooth operation, complete in all respects.

l) Flooring:

Providing and laying PCC flooring of the specified grade and thickness over the prepared brick flat soling or approved sub-base, including levelling, compaction,

finishing, provision of specified joints, curing, and maintaining the required floor levels and slopes for proper drainage, complete as per approved drawings.

m) Site Clearance and Final Finishing:

Clearing the site of construction debris, surplus materials, and waste generated during execution, including removal of temporary works, making good damaged areas, cleaning the completed shed, and handing over the site in a clean, safe, and usable condition, complete in all respects.

3. Note:

i. BoQ for all works are indicated in the price bid of the tender document. Bidder to consider the associated works linked with the price bid line items and to indicate the cost accordingly.

ii. All the materials, labour, tools & tackles, and machinery required to complete the job are in the scope of the contractor, unless otherwise specified in the tender.

iii. The removal of scrap, debris, concrete waste, and other waste generated from the construction areas to outside the yard premises is within the contractor's scope.

iv. Transportation, loading, unloading, and associated expenses of all the supply items shall be in the scope of the contractor.

v. CSL shall have the right to propose changes/modifications to the indicated scope. The successful bidder must follow the instructions from CSL and execute the job without hindrances. Measurement shall be certified as per the final scope executed by the successful bidder.

vi. Activities not indicated herein but required for completion of work are also included in the scope of the contractor and the same has to be carried out without any time-cost implications to the CSL.

vii. Staging materials arrangement, staging installation and dismantling shall also be included in the scope of the contractor for carrying out the works.

4. List of Approved Makes:

Sl. No.	Material	Brands
1.	Cement	L&T, ACC, Aditya, Ambuja, Ultratech, Lafarge, J&K, Dalmiya, Star, JSW Cement etc. or any other approved

		brand.
2.	Steel (TMT)	Tata, Vizag, SAIL, TISCO, RINL, Jindal Steel and Power Ltd, JSW Steel Ltd or equivalent as approved
3.	Paint & Primer Distemper	ICI (AkzoNobel), Berger, Asian, Jotun or equivalent as approved

5. Place of work:

Cochin Shipyard Limited
CSL-Kolkata Ship Repair Unit (CKSRU),
Gate No. 9, Netaji Subhas Dock,
Circular Garden Reach Road, Kolkata – 24

6. Period of completion:

The entire scope of work has to be completed within **60 days** from the date of acceptance of the Work Order.

7. Eligibility criteria:

The minimum qualification criteria for participating in the tender shall be as follows:

a) Experience having successfully completed civil work i.e. excavation, PCC, RCC works and structural steel work (fabrication, erection and supply) during the last 5 years ending last day of month previous to the one, in which tenders are invited should be either of the following:

i. Three similar completed works each costing not less than the amount equal to Rs. 8 Lakhs.

OR

ii. Two similar completed works each costing not less than the amount equal to Rs. 15 Lakhs.

OR

iii. One similar completed work costing not less than the amount equal to Rs. 18 Lakhs.

Details of orders executed along with completion certificate from the client indicating value of work executed and performance shall be submitted in this regard. The similar work should have been executed in India.

b) The bidder shall have an average annual turnover of Rs. 5 Lakhs in the last 3 consecutive FYs (FY23, FY24, FY25). Copy of audited balance sheets showing turnover and profit & loss account of the firm for all three FYs shall be submitted.

Construction of scaffolding storage shed at CKSRU, Kolkata

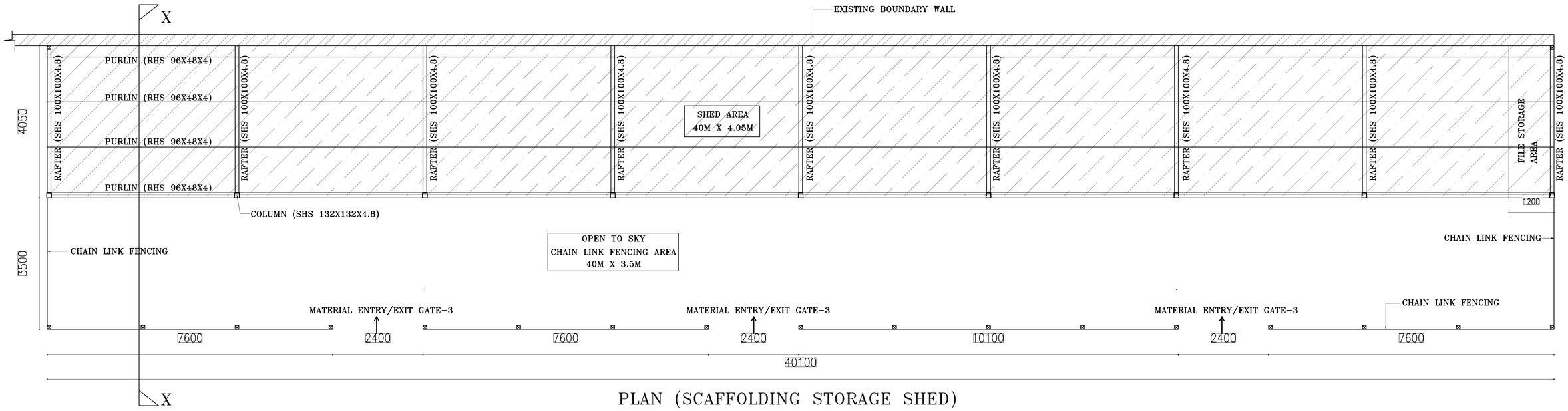

PLAN (SCAFFOLDING STORAGE SHED)

कोचीन शिपयार्ड लिमिटेड * COCHIN SHIPYARD LIMITED * कोलकाता-24 KOLKATA-24

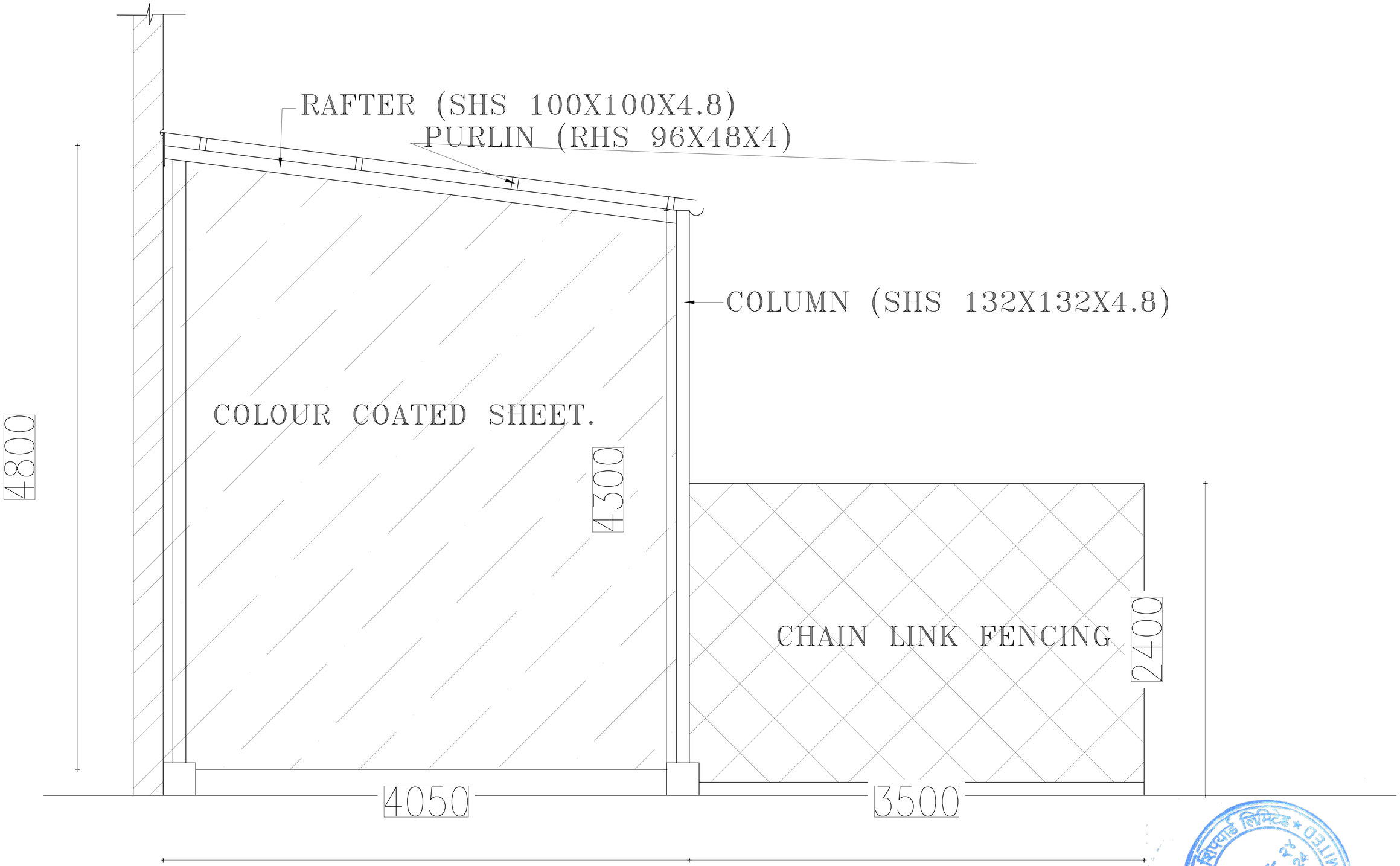

SECTION X-X

कोचीन शिपयार्ड लिमिटेड * LIMITED
कोलकाता- 24
KOLKATA-24
COCHIN SHIPYARD LIMITED

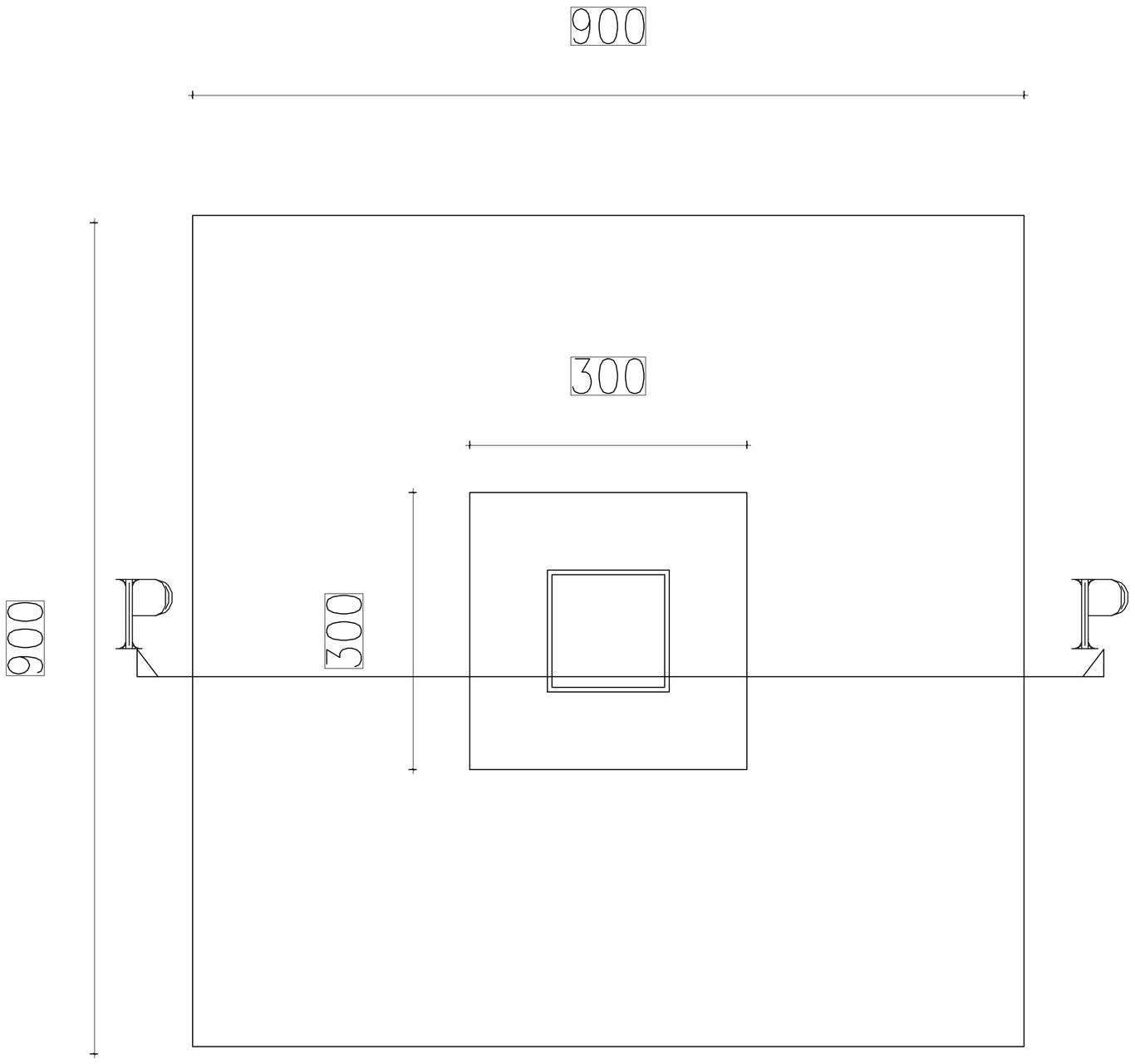

FOOTING PLAN

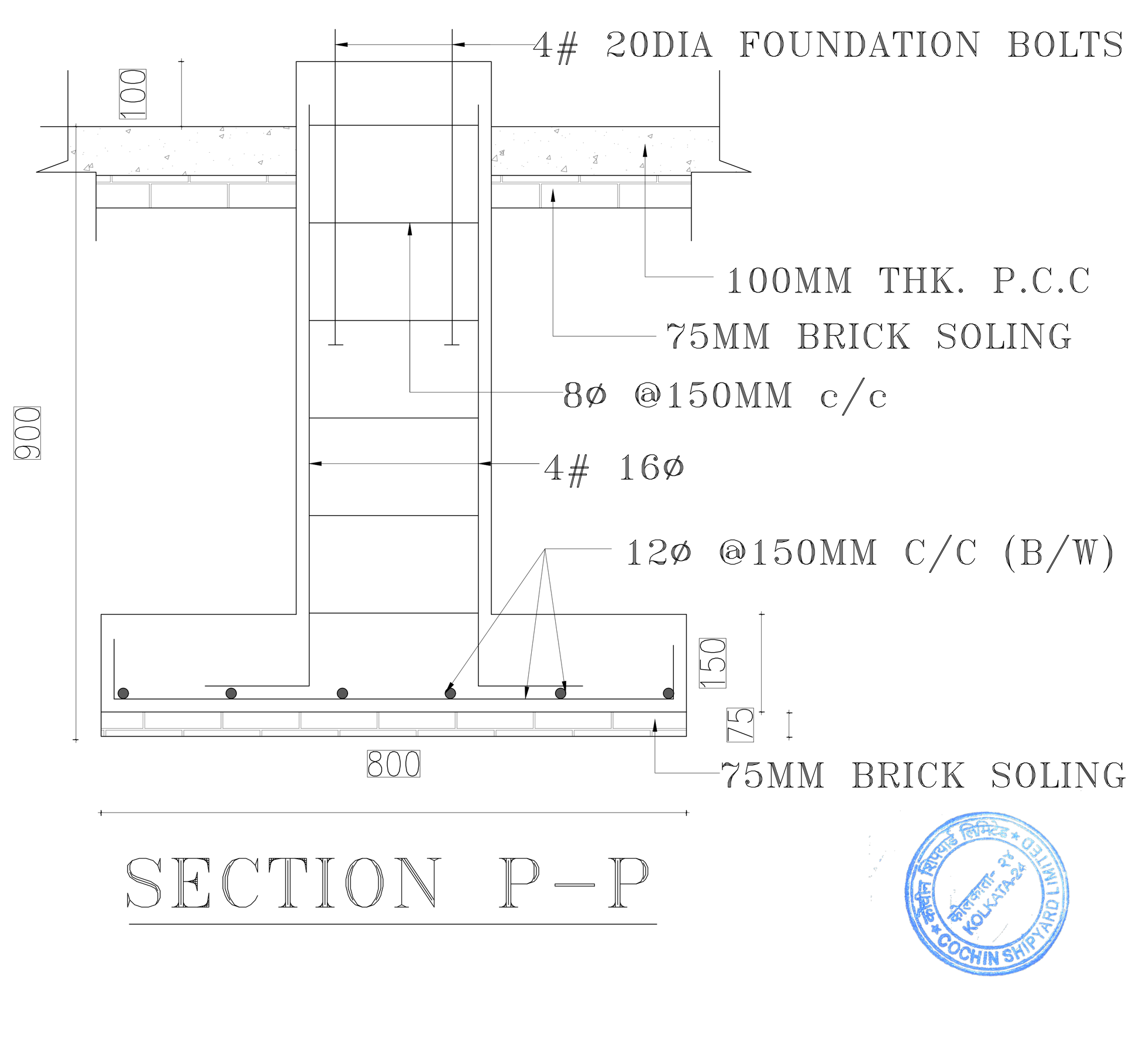

SECTION P-P

कोचीन शिपयार्ड लिमिटेड * COCHIN SHIPYARD LIMITED * कोलकाता- 24 KOLKATA-24

PRICE BID							
Name of work: CONSTRUCTION OF SCAFFOLDING STORAGE SHED AT CKSRU, KOLKATA							
Tender No: CSL/CKSRU/TEN/722/2026-27 dated 18.11.2026							
Sl. No.	**Description**	**Quantity (A)**	**Unit**	**Rate per unit excluding GST (Rs) (B)**	**Total rate excluding GST (Rs) (C=A*B)**	**GST %**	**HSN/ SAC Code**
1	Supply, fabrication and erection of MS Structural work as per drawing using RHS/SHS Section. (make- TATA /JINDAL)	6.5	MT				
2	Providing and applying 1 coat of epoxy primer and 2 coats final epoxy HB paint of approved colour. Sand blasting shall be done before applying primer coat. (Make- Asian/berger)	6.5	MT				
3	Fitting and fixing of colour coated roof sheet with self taping screw0.50 mm thick, (Make-TATA/JINDAL), Charges includes groove cutting in existing wall and redoing after fixing of roof sheet properly.	300	Sq.M				
4	Charges for making R.C.C foundation as per drawing including all materials & labours for Shed columns. (Note: rate includes excavation, soling, RCC, Steel reinforcement, shutting and curing complete in all respect as per drawing)	11	Nos.				
5	Supply, fabrication and installation of 20mm dia x 600mm length foundation bolts of garde 8.8	44	Nos.				
6	Area preparation work (earth cutting/necessary filling), compaction, levelling before soling. and excavated soil including arranging of vehicle, loading, transportation and disposal outside as directed by Engineer.	200	CuM				
7	Supply and Laying of single brick flat soling including ramiing,dressing and filling gaps with local sand including Labour, materials & machinery (for flooring only)	325	Sq.M				
8	Levelling, dressing, compaction and doing 100mm thick RCC Floor of grade M-20. (for flooring only)	35	CuM				
9	Supply, fabrication and fixing of G.I wire mesh fencing along with the associated civil works as per the technical specifications/drawing.	50	MTR.				
10	Supply, fabrication and installation of sliding gate with locking arragement as per the technical specifications. (2.4 mtr width & 2.4 mtr height)	3	Nos.				
Total Amount Excl. GST (in figures)							
Total Amount Excl. GST (In Word)							

Annexure - 3

TERMS AND CONDITIONS

1. Tenderers are to carefully go through the terms and conditions and the technical specification of the items for which offers are called for
2. Offer shall be submitted in the prescribed form in the 'CKSRU Tender Box' located at CSL-Kolkata Ship Repair Unit, Gate No.9, Netaji Subhas Dock, Circular Garden Reach Road, Kolkata - 700024, and has to be addressed to The Assistant General Manager i/c (CKSRU), Cochin Shipyard Limited, CSL-Kolkata Ship Repair Unit, Kolkata - 24.
3. In case of bid sent through e-mail, then the documents should be password protected and the passwords should be passed on to the concerned officer while attending the bid opening or by e-mail or SMS immediately before the tender opening against the request from concerned officer.
4. **Validity:** The offer should be valid for a minimum period of four months from the tender closing date.
5. **Earnest Money Deposit (EMD):** Rs.10,000/- (Rupees Ten Thousand only)
   EMD for a valid bid has to be submitted by the bidder in the form of demand draft / FDR / Bank Guarantee (Annexure 18) drawn in favour of Cochin Shipyard Limited from scheduled bank except Co-operative bank in case of indigenous bidders and from international bank as per the CSL approved list in case of foreign bidder. Cheques are not acceptable. Bids submitted without EMD will be rejected. No interest shall be paid for the EMD, Security Deposit or Performance guarantee. EMD will be returned to the unsuccessful bidders post finalization of tender and issue of Work Order to the L1 bidder.
6. Earnest Money Deposit remitted by the successful bidder shall be adjusted against the Security Deposit or refunded separately as decided by CSL. The Earnest Money Deposit (EMD) may be forfeited if :-
   a) The bidder withdraws, amends, impairs, or derogates from the tender or agreed conditions in any respect within the period of validity of their offer.
   b) Non-acceptance of work order.
   c) Bidder after accepting the work order fails to provide services.
7. Micro and Small Enterprises (MSEs) as defined in MSE Procurement Policy issued by Department of Micro, Small and Medium Enterprises (MSME) or are registered with the Central Purchase Organisation or the concerned Ministry or Department are exempted from submission of EMD.
8. **Cost of Tender Form**: Nil
9. **Mode of tender:** The tender for the work will be based on Two Bid system. The tender shall consist documents as indicated at Annexure-4.
10. The bidders are expected to inspect the site to know the nature of work and site condition at CKSRU, Kolkata as applicable with prior intimation to the Officer In-Charge. Bidders can contact Officer In-Charge of the work which is indicated in the tender notice for any clarification before submitting the offer. If clarifications/details are not obtained before the offer is submitted, no claim on this account will be admitted.
11. Bidders can contact Officer-in-Charge of the work which is indicated in the tender notice for any clarification before submitting the offer. If clarifications/details are not obtained before the offer is submitted, no claim on this account will be admitted.

12. Bidders to note that no advance payment will be made by CSL against work order/ supply order issued.
13. Corrections and additions if any in the bid must be attested/ duly signed by the bidder. In the case of error in multiplication/addition in amount calculated, the unit rate quoted will be considered as correct and the amount will be calculated accordingly. Conditional rebates & discounts, incomplete/ambiguous offers are likely to be rejected.
14. L1 will be arrived based on the lowest total amount quoted excluding GST.
15. Normally CSL will award the contract to the Bidder whose bid has been substantially responsive to the bidding documents and who has offered lowest evaluated total amount. However, if in the opinion of CSL, the total price or certain item rates quoted by the lowest evaluated bidder are considered high, CSL may invite such bidder for price negotiation. Lowest quoted bidder shall attend such negotiation meetings and if requested by CSL shall provide the analysis of rates/break – up of amount quoted by him for any or all items of Schedule of Rates/ prices to demonstrate the reasonability. As a result of negotiation, bidder may offer rebate on his earlier quoted price.
16. No enhancement of rate for whatever cause will be allowed once the offer is accepted and an order is placed.
17. GST/Duties, if any, payable extra is to be indicated in the techno-commercial part for two bids.
18. If the supplier is willing to manufacture precast blocks inside the CKSRU premises, the following requirements (not limited to) have to be taken care of.
    a) **Dock entry permit:** Since the work is to be carried out inside the docks area, the contractor shall abide by all rules and regulations of the docks in force from time to time as applicable. The contractor is required to obtain required permit / RFID card issued by SMP to enter the CKSRU premises. The necessary recommendations will be issued by CKSRU to permit the contractor to take the materials / equipment / vehicle inside the dock area for the execution of the work.
    b) The work shall be carried out without damaging any of the existing structures/ structures under construction/ underground pipelines or cables etc. in the locality. If any damage occurs to the property, by the contractor's operation shall be compensated / made good at contractor's risk and cost to the satisfaction of the Officer in-charge of the works, failing which department will do the rectification work and the cost incurred will be recovered from his bill.
    c) The Following services will be issued from a common source at free of cost depending on availability. Contractor has to make his own arrangements to avail the same from the source point at his expense and at his risk and subject to satisfying statutory rules and regulations if any.
        - Water
        - Electricity
    d) Electric power supply is available but cannot ensure uninterrupted power supply. There can be restriction in supply of power. Contractors shall make note of this situation.
    e) Waste materials are to be cleared from site on a day-to-day basis. Each area of working is to be cordoned off to ensure safe transportation of men and material by CSL in the area as directed by the Officer in-charge.

f) All the electrical equipment and Welding sets used for the execution of the work shall be provided with ELCB and safety relay. Also, FBA (Flash back arrester) to be provided in all gas cutting machines at both the ends (cylinder and torch ends). Similarly, all the testing / measuring instruments shall be calibrated and will have valid calibration certificate.

g) All labour, skilled or unskilled shall be provided by the contractor. Settling any dispute with the labor, subcontractor, labour union shall be the sole responsibility of the contractor. Workers engaged for works should have sufficient knowledge and experience in the respective fields.

h) Safety and Quality of the work to be ensured by the Contractor to the satisfaction of the employer. Contractor shall be solely responsible for non-compliance of the safety points and work may be stopped by the CSL. HSE guidelines issued by CKSRU/CSL Kochi from time to time shall be followed by the contractor.

i) Necessary Insurance Coverage for the contractor's materials / equipment / vehicle including Third Party liability and for the workmen (covering Workmen's Compensation Act) engaged by the Contractor are to be taken at his cost. If any accident/injury occurs to any other persons/public due to proven negligence/non-adherence to relevant safety and other precautions on the part of Contractor/it's employees, the contractor shall remain liable to pay necessary compensation and other expense, as decided by appropriate authorities.

j) Any loss / damage sustained by CKSRU on account of any negligent act of the contractor or the employee engaged by the contractor will be fully recovered from the contractor.

k) The contractor or the employee engaged by the contractor are strictly banned from use of any kind of Narcotics drugs / Alcohol / smoking etc. inside CKSRU premises and any illegal activity by the work men should be reported to the Officer-in-charge without delay and the contractor shall remove such persons from Yard premises.

l) The Contractor shall ensure proper performance, conduct and behavior of the workforce engaged by him and any of the premises of the Company and shall remove with immediate effect, the engagement of such person(s), who does/do not give satisfactory performance, conduct himself/themselves properly and misbehave with the regular employees/personnel of the Company in any place.

m) The Contractor shall ensure that the workforce engaged by him carry with them valid identity card to be issued him during the working hours.

n) An attendance register of the Contractor's workforce shall be maintained by its supervisor or any other person as deployed by him.

o) The Contractor shall reduce or increase the workforce as and when the exigencies of the work may require.

p) The Contractor shall obtain appropriate licence under the Contract Labour (Regulation & Abolition) Act, 1970 and the Rules as amended up to date and shall comply with all terms and conditions thereof strictly, and shall keep such licence duly validated and/or renewed from time to time throughout the currency of the Contract.

q) The Contractor shall produce all the registers and records to the representative of the Company and Government authorities as and when required for ensuring statutory

compliance. The Contractor shall submit a Certificate for having complied with all the statutory provisions under all labour statute applicable to his contract at the end of the job period and only then his bill will be processed for payment by the Company.

r) Contractor should take registration codes under Employees Provident Fund (Miscellaneous Provisions) Act 1952 and Employees' State Insurance Act 1948 for issuing PF number and ESI number to his contract workmen.

s) The Contractor shall ensure that, to remit the Provident Fund and ESI contributions on before 15th of every month for the previous month wages as per the provisions of Employees' Provident Funds & Miscellaneous Provisions Act, 1952 & Employees' State Insurance Act, 1948. While submitting bills to the Company, the Contractor shall also render documentary evidence such as challan of remittance, transaction confirmation copy etc. with an undertaking of the deposits of Provident Fund/ESI contributions made by him in respect of the workforce under consideration for payment of wages, failing which, the payment of the bill by the Company will be withheld until such compliance is met.

t) The acknowledgment copy of the remittance statement shall be submitted along with bills for verification as per Statute and company policy.

u) The Contractor shall ensure that the payment of wages to the workforce engaged by him is made to them keeping in view statutory provisions with reference to the payment of wages (including provisions of minimum wages fixed by the Central Government for each category) in presence of Company representative within stipulated time of the following calendar month.

v) The Contractor's workforce shall be liable for security check by the Security Staff deployed by the Company as and when deemed essential. In case of any malpractice / theft is found, company has the rights to cancel the entry permit and to take suitable legal action against contractor personnel. Necessary action has to be taken by the contractor on the said personnel and details of such action should be intimated to the company officially within 3 days from the date of incident. In case of such repeated incidents from the employees of same contractor, company has the rights to take suitable action against contractor including cancellation of vendor code.

w) The Contractor undertakes that it has complied with and agrees to comply with all the necessary statutory requirements such as maintaining Registers, Records and Returns under Contract Labour (Regulation & Abolition) Act, 1970, Factories Act, 1948, Minimum Wages Act, 1948, Payment of Wages Act 1936, Payment of Bonus Act, 1965, Employees' Provident Funds & Miscellaneous Provisions Act, 1952, Employees' State Insurance Act, 1948, Employees' Compensation Act, 1923, Labour Welfare Fund Act, 1987, The Industrial Employment (Standing Orders) Act, 1946 etc. as applicable to its business for providing the said services.

x) In case, while on duty and during the course of engagement in the work premises of the Company under this contract, if any of the Contractor's workforce meet(s) with any injury/indisposition due to accident or other natural calamities, the Contractor shall ensure that immediate and adequate medical aid viz. First Aid and subsequent treatment facilities are provided to the person(s) concerned free of cost and without fail. In addition, the Contractor shall also be liable for meeting with statutory liabilities under

the ESI/EPF or Employees' Compensation Act. In case, the Contractor is exempted from ESI coverage of his employees, he should be covered under Employees' Compensation Act or having suitable Group Accident Policy for his workers.

y) The Contractor shall indemnify and compensate CSL, if the Company as principal employer under the Contract Labour (Regulation & Abolition) Act, 1970 becomes liable to assume any liability towards the workforce engaged by the Contractor. In that event, the provisions relating to recovery as provided in the relevant clauses of the said Act shall be applicable.

z) Additional safety provision: For the work carried out within dock area the contractor shall abide by all provisions of the dock workers (Safety, Health and Welfare) Regulation 1990 without causing any damage / accident in the work premises which will be ultimately causing loss to CSL either directly or indirectly. The contractor has to take all the necessary safety measures to prevent any damage/ accident at site during the execution of work.

19. **Payment terms:**

a) 100% payment shall be released after completion of total scope of the work and acceptance by CSL representative at CKSRU site.

b) Supplier shall indicate details like PAN, GST details etc. required for processing payment. Payments will be made through NEFT/RTGS/Cheque mode and necessary details shall be furnished by the supplier in the format at Enclosure-1.

c) CSL reserves the right for the deduction of taxes and duties as applicable from the bill or invoice.

d) The invoice to be raised on Officer in-charge, Cochin Shipyard Limited, CSL-Kolkata Ship Repair Unit, Dry Dock Office Building, Netaji Subhas Dock, Gate No.9, Circular Garden Reach Road, Kolkata – 700024.

e) GST No. of CSL-Kolkata Ship Repair Unit is 19AAACC6905B1Z1.

f) Payment will be released tentatively within 30 days from the date of submission of bill duly certified by the authorized CSL representative at Kolkata. Delay in submission of bills will lead to delay in processing of payment.

20. **Security Deposit/ Bank Guarantee:**

a) The successful bidder shall remit a security deposit of 3% of the total order value (excluding taxes, duties,) within 7days from the date of receipt of the order, in the form of Bank Guarantee / demand draft drawn in favour of Cochin Shipyard Ltd towards the satisfactory performance of the contract, if an order is placed on them. Alternatively, a DD / Bank Guarantee equivalent to above % of the total order value (excluding taxes, duties) as per CSL format from an International Bank as per approved list of banks available in CSL website (for overseas supplier) & Scheduled Indian bank for Indian supplier is to be submitted, if an order is placed towards satisfactory performance of the contract.

b) The Bank Guarantee /DD as above should be initially valid till 90 days after completion of supplies in terms of SD and later revalidated (within the validity of initial BG) to cover the guarantee period indicated plus 90days. Fixed Deposit Receipt (for equivalent amount of Security Deposit/WBG required as per tender) in lieu of bank guarantee is also acceptable. Fixed Deposit Receipt shall be in the name of supplier with lien marked in favour of Cochin Shipyard Limited, Kochi.



21. MSEs, Startups and Make in India a) Local Suppliers (Make In India), MSME firms and Startups will be eligible for various Relaxations in pre-qualification criteria and other Benefits as per the orders promulgated by Government of India. Bidders are advised to refer the details of various benefits and relaxation in pre-qualification criteria as published at CSL website (www.cochinshipyard.com) under the Tenders tab for further reference.
22. The rate quoted shall remain firm throughout the period including extension if any.
23. The firm should not subcontract the work in part or full.
24. **Guarantee Period:** The contractor has to guarantee the work for satisfactory performance against defective workmanship/inferior quality of materials used for a minimum period of One Years from the date of completion of job. Any defect developed during this period has to be rectified by the contractor at his own expenses. In addition to this contractor has to rectify the defects occurred in warranty period due to defective workmanship, at free of cost. Towards the above guarantee, 3% of the order value (rounded off to next fifty rupees) shall be deducted from the payment.
25. **Risk Purchase:** If the supplier fails to supply the items ordered with in the delivery date or violate any of the terms and conditions of the purchase order, CSL/CKSRU shall have the following rights.
    a) To terminate the contract with 15 days' notice forfeiting the security deposit.
    b) To initiate alternate procurement action at the risk and cost of the supplier.
26. **Liquidated Damage:** In case any delay in completion period or in the Supply of ordered materials beyond the stipulated completion period / delivery period, the contractor has to pay Liquidated Damage (LD), a sum equivalent to ½% (half percentage) of the order value per week or part of the week subjected to maximum of 10 % of the order value.
27. **Force Majeure condition:** Should failure in performance of the contract or part thereof arise from war insurrection, restrain imposed by Government, Act of Legislature or other Statutory Authority or illegal strike, riot, legal lock-out, flood, fire, explosion, act of God or any inevitable or unforeseen event beyond human control which may be construed as reasonable ground for an extension of time, CSL may allow such additional time as is mutually agreed, to be justified by the circumstances of the case. The occurrence/ cessation of force majeure situation is to be informed with documentary evidence within 15 days from the date of occurrence/cessation.
28. Transportation and Transit insurance shall be in the scope of supplier and unit prices quoted are to be inclusive of the same.
29. Packing Material should be eco-friendly.
30. Supplier should follow the statutory requirements of products offered.
31. Products supplied shall be nontoxic and harmless to health. In the case of toxic materials Material Safety Datasheet may be furnished along with the material.
32. After submission of tender, no unsolicited correspondence will be entertained.
33. Cochin Shipyard Limited does not bind itself to accept the lowest or any tender but reserves to itself the right to reject any or all or a part of any tender at its discretion. After submission of tender, no unsolicited correspondence will be entertained.



Annexure - 4

COCHIN SHIPYARD LIMITED
CSL-KOLKATA SHIP REPAIR UNIT (CKSRU)
KOLKATA – 700 024

SPECIAL INSTRUCTIONS FOR TWO BID SYSTEMS

1. **MODE OF SUBMISSION OF TENDERS**
   Tenders should be submitted in two separate sealed covers superscribed in capital letters as PART-I "TECHNO-COMMERCIAL" & PART-II "PRICE" indicating the tender number, due date and name & address of the tenderer.

2. **TECHNO-COMMERCIAL PART SHOULD CONTAIN FOLLOWING DETAILS**
   a. Documents for minimum eligibility criteria
   b. Drawings &Technical Literature, if any
   c. Copy of unpriced Price bid (Price bid without price& with percentage of taxes & duties and details like quoted /Nil/Included need to be mentioned for each line item.)
   d. Complete set of tender documents duly signed and sealed on all pages as a token of acceptance.

3. **PRICE PART SHOULD CONTAIN FOLLOWING DETAILS**
   a. Duly filled price bid as per the tender document.
   b. The quoted rate shall include rate for material, service engineer if required, transportation, loading etc.to deliver the items to the location as mentioned in the tender document.
4. CKSRU/CSL reserves the right to alter, modify the scope of supply at their discretion and consistent with the policy of the Government of India and statutory bodies under them as applicable to the contract from time to time.
5. The techno-commercial part alone will be opened initially on the due date of tender. The price part will
   be opened only after evaluation of the Techno-commercial part. Firms will be intimated the date of opening of the price port, whose Techno-commercial bid is acceptable, in due course. Tenderers shall not be allowed to attend the Techno-commercial bid opening.
6. The tenderer shall ensure that their Indian Agent is not representing any other suppliers for the same Tender. In other words, Indian Agents are not permitted to represent more than one firm for a particular Tender.
7. After submission of quotation / price opening, no unsolicited correspondence will be

entertained.

8. Clarifications, either technical or commercial, should be submitted to points specially asked for only. The opportunity so given should not be used for correcting/changing/amending the data/conditions already submitted with the tender.
9. Price part should be submitted in the Price Bid format provided. Price should be quoted separately for each item shown in the format. Combining of figures against more than one item and ambiguous clauses will lead to rejection of the bid. In case if there is any ambiguity in the price bid, unit rate quoted will be considered as base and L1 will be arrived accordingly.
10. Offers should be clear and unambiguous. Incomplete/ambiguous offers are likely to be rejected.



Enclosure - 1

Electronic Payment Mandate Form

(Mandate for receiving payments through RTGS/NEFT Cochin Shipyard Ltd)

1) Vendor Name
2) Vendor Address with Phone No

3) Vendor Code
4) Permanent Account Number (PAN)
5) Particulars of Bank Account
   a. Name of the Bank
   b. Name of the Branch
   c. Branch Code:
   d. NEFT Code of the Bank:
   e. City Name:
   f. Branch Location:
   g. Branch Telephone No.:
   h. Bank IFSC Code:
   i. 9-Digit MICR Code

(where MICR is starting with "0". Please take the correct code from your bank for proper identification of city, bank, branch)

   j. Type of the Account (S.B,Current or Cash Credit) with code (010/011/013)
   k. Account Number (as appearing on the cheque book)

6) Email Address of Vendor:
7) Date of Effect of RTGS/NEFT in your Bank:

(Please enclose a cancelled un-signed cheque leaf to enable us to verify the details mentioned above)

We hereby declare that the particulars given above are correct and complete. If the transaction is delayed or lost because of incomplete or incorrect information, we would not hold the company responsible.

Signature of Employee

COCHIN SHIPYARD LIMITED KOLKATA-24

Bank Certificate

We certify that_____ has an Account No._____ with us and we confirm that the details given above are correct as per our records.

Date:

Place:

(.....)
Authorized official of Bank

Enclosure - 2

BANK GUARANTEE TOWARDS EMD

To

COCHIN SHIPYARD LTD

(GOVT. OF INDIA ENTERPRISE,)

PO BAG No. 1653 , PERUMANOOR PO, COCHIN 682 015.

This deed of Guarantee made on ……. Day of …….Two Thousand ……..between CSL on one part and ….. (Name and address of the bank) of the other part is as follows:

In consideration of CSL having allowed M/s. …..(herein after referred to as 'the Contractor') to submit Tender No…..without Earnest Money according to the conditions of such Tender Notification, we… (Name of the Bank) (hereinafter referred to as 'the bank') undertake to pay to CSL on demand the sum of money payable as Earnest Money in respect of the Tender Number……..made by the contractor in case the contractor withdraws from the tender before the date of firmness stipulated or when the tender is accepted by CSL, the contractor makes default in furnishing the Security Deposit or in entering into an agreement as required by CSL or otherwise commits any breach of the terms and conditions of the tender.

We, the bank, hereby irrevocably undertake to pay you any amount not exceeding in total the Guarantee Amount upon receipt by us of your demand in writing accompanied by the following documents:

Your signed statement certifying that the Contractor is in breach of his obligation(s) under the Contract and the respect in which the Contractor is in breach.

Any demand for payment should contain your authorized signatures which must be authorized by your bankers or by a notary public.

The guarantee shall remain in full force and effect during the period that would be taken for the finalization of the tender and till CSL certifies that the terms and conditions of the said tender have been fully and properly carried out by the said contractor and accordingly discharges this guarantee or for 6 months from the date of issue of this guarantee whichever is earlier. A notice of the claim under this guarantee may be served on the bank within 3 months after the said period in which case the same shall be enforceable.

We, the Bank, further agree that any change in the constitution of the said contractor or the said bank shall not discharge our liability hereunder. This guarantee shall not be avoided, released or affected by any variation in the terms of the tender, acceptance of the contract between the contractor and CSL or any neglect, indulgence or forbearance by CSL.



Notwithstanding anything contained herein:

1. Our liability under this Bank Guarantee shall not exceed ------only).
2. This Bank Guarantee shall be valid up to (date) (9 months from the date of issuing the BG) and
3. We are liable to pay the guaranteed amount or any part thereof under this bank guarantee only and only if you serve upon us a written claim or demand on or before .....(validity date).

Any demand for payment under this Guarantee must be received by us at this office during working hours on or before the validity Date. Should we receive no claim from you by the validity Date, our liability to you will cease and the guarantee will definitely become null and void whether returned to us or not.

Yours truly,

Signature and seal of the guarantor:……

Name of Bank:……

Address: ……

Date:……



Annexure 5

VENDOR DETAILS

1	Name of the Bidder/Firm	
2	Registered office Address of Company/Firm	
3	Registered office Address of Company/Firm in Kolkata	
4	Telephone No./Fax No./Mobile No	
5	E-mail address	
6	Names of the contact person & designation	(i) (ii) (iii)
7	Type of Entity-Proprietorship/Partnership firm/Company/NSIC/MSME Category etc. (Please attach registration certificate of Firm/Partnership agreement/proprietorship documents)	
8	PAN Card Number	
	GST Registration Number (GST certificate to submitted along with the technical bid)	
	EPF registration no. (EPF registration certificate to be submitted along with the technical bid) Note: In case firm does not have EPF registration reasons thereof to be indicated	
	ESI Registration No. (ESI registration certificate to be submitted along with the technical bid). Note: In case firm does not have ESI registration reasons thereof to be indicated	
	Copy of License if applicable	
9	Whether the Agency has been blacklisted/debarred or given tender holiday or contract terminated before expiry of the contract period by any 'Govt./autonomous bodies/ organizations where bidder has provided services earlier due to deficiencies in service or misconduct etc.	Yes/No (please tick as applicable) If yes, please furnish details on a separate sheet

Sign & seal of contractor: